Ejector, Series EBS

► push-in fitting ► pneumatic control, T-design ► with silencer ► vacuum switch: electronic, non-adjustable

00125709

Type	Ejector
Ambient temperature min./max.	+0°C / +50°C
Medium temperature min./max.	+0°C / +50°C
Working pressure min./max.	3 bar / 6 bar
Medium	Compressed air
Max. particle size	5 µm
Oil content of compressed air	0 mg/m³ - 1 mg/m³
Protection class	IP40
Display	LED
Hysteresis	< 0,02 bar
Repeatability (% of full scale value)	± 1 %
DC operating voltage	24 V
Voltage tolerance DC	-20% / +10%
Switch output current Max.	60 mA
Local power consumption	<15 mA
Status display	LED
Materials:	
Housing	Polyamide, fiber-glass reinforced
Seal	Acrylonitrile Butadiene Rubber
Nozzle	Aluminum
Release ring	Polyamide
Silencers	Polyethylene

Technical Remarks

- Note: All data refers to an ambient pressure of 1013 mbar and an ambient temperature of 20 °C.
- The pressure dew point must be at least 15 °C under ambient and medium temperature and may not exceed 3 °C.

Type	Nozzle Ø	Compressed air connection	Vacuum connection	Max. vacuum level at p.opt	Max. suction capacity	Air consumption at p.opt.	Sound pressure level intake effect	Part No.
	[mm]			[%]	[l/min]	[l/min]	[dB]	
EBS-PT-05-NN	0.5	Ø 4	Ø 4	84	7	14	53	R412007455
EBS-PT-07-NN	0.7	Ø 4	Ø 4	85	16	25	59	R412007456
EBS-PT-10-NN	1	Ø 6	Ø 8	85	38	48	59	R412007457
EBS-PT-15-NN	1.5	Ø 6	Ø 8	85	70	118	66	R412007458
EBS-PT-20-NN	2	Ø 8	Ø 10	86	123	208	68	R412007459
EBS-PT-25-NN	2.5	Ø 8	Ø 10	82	218	311	75	R412007460

Part No.	Sound pressure level intake effect	Protection against overpressure (max.)	Switching point	Weight	Fig.
	[dB]	[bar]	[bar]	[kg]	
R412007455	58	5	-0.6	0.086	Fig. 1
R412007456	65	5	-0.6	0.086	Fig. 1
R412007457	65	5	-0.6	0.1	Fig. 2
R412007458	72	5	-0.6	0.1	Fig. 2
R412007459	77	5	-0.6	0.145	Fig. 3

Switching point: non-adjustable vacuum switch
Output signal: 1 x PNP, NO (normally open contact)
p.opt. = optimum working pressure

Part numbers marked in bold are available from the central warehouse in Germany, see the shopping basket for more detailed information

Ejector, Series EBS

► push-in fitting ► pneumatic control, T-design ► with silencer ► vacuum switch: electronic, non-adjustable

Part No.	Sound pressure level intake effect	Protection against overpressure (max.)	Switching point	Weight	Fig.
	[dB]	[bar]	[bar]	[kg]	
R412007460	78	5	-0.6	0.145	Fig. 3
Switching point: non-adjustable vacuum switch Output signal: 1 x PNP, NO (normally open contact) p.opt. = optimum working pressure					

Vacuum p2 depending on working pressure p1

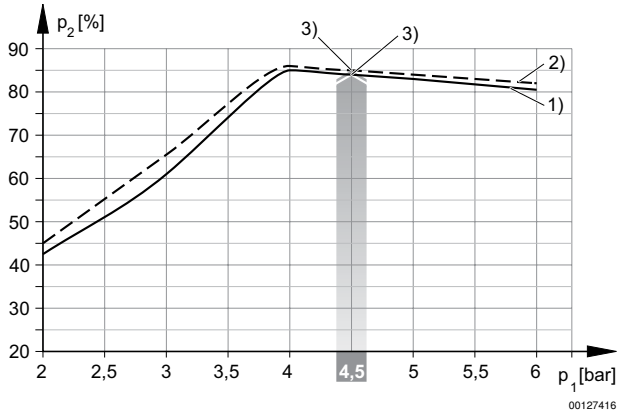

1) = Ø nozzle 0.5 mm 2) = Ø nozzle 0.7 mm
3) optimum working pressure

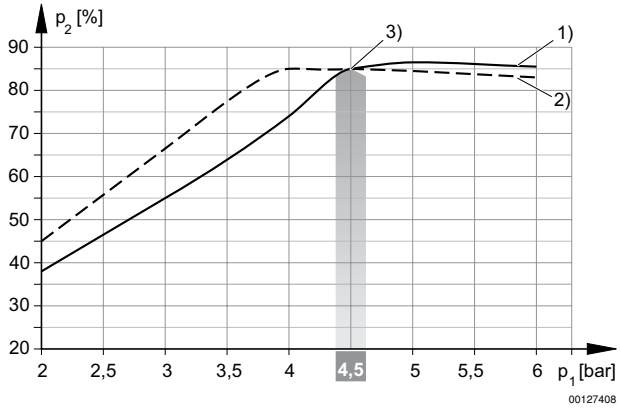

1) = Ø nozzle 1.0 mm 2) = Ø nozzle 1.5 mm
3) optimum working pressure

Ejector, Series EBS

► push-in fitting ► pneumatic control, T-design ► with silencer ► vacuum switch: electronic, non-adjustable

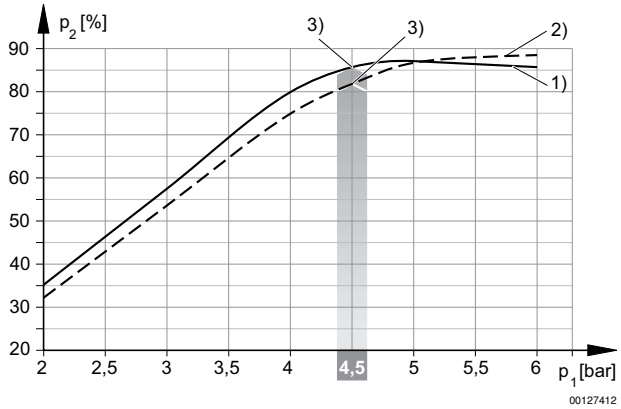

1) = Ø nozzle 2.0 mm 2) = Ø nozzle 2.5 mm
3) optimum working pressure

Suction capacity qs depending on working pressure p1

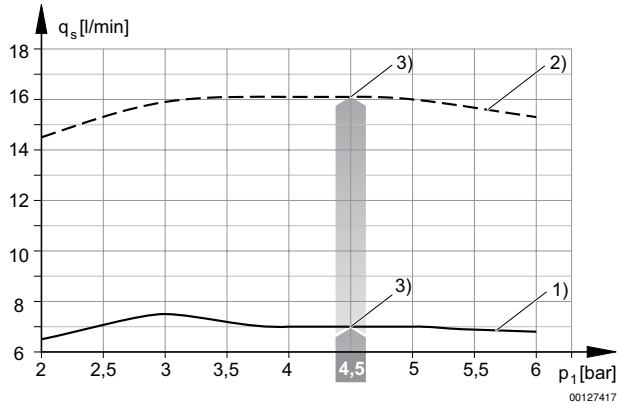

1) = Ø nozzle 0.5 mm 2) = Ø nozzle 0.7 mm
3) optimum working pressure

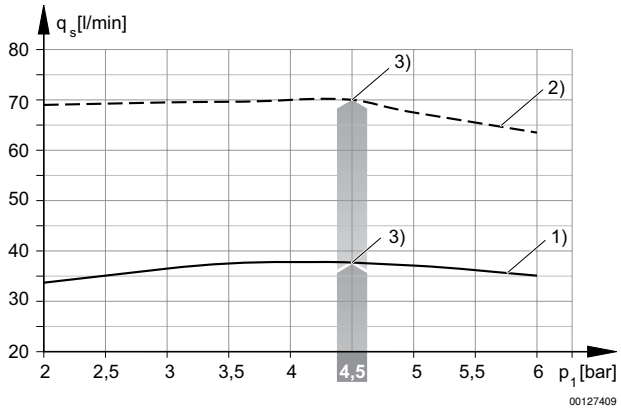

1) = Ø nozzle 1.0 mm 2) = Ø nozzle 1.5 mm
3) optimum working pressure

Ejector, Series EBS

► push-in fitting ► pneumatic control, T-design ► with silencer ► vacuum switch: electronic, non-adjustable

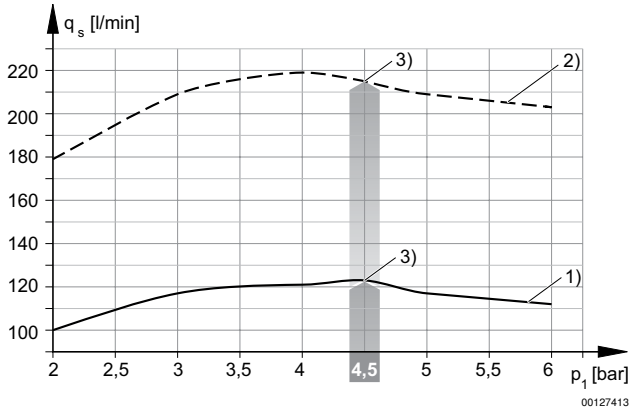

1) = Ø nozzle 2.0 mm 2) = Ø nozzle 2.5 mm
3) optimum working pressure

Evacuation time tE depending on vacuum p2 for 1 l volume (with optimal operating pressure p1opt)

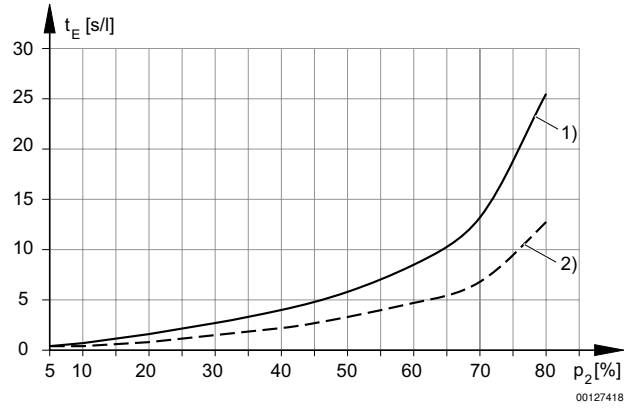

1) = Ø nozzle 0.5 mm 2) = Ø nozzle 0.7 mm

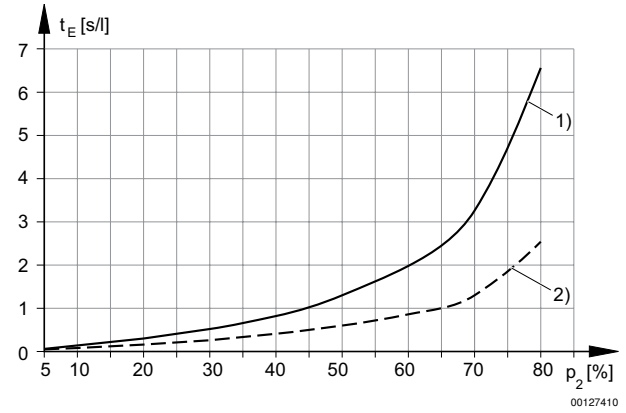

1) = Ø nozzle 1.0 mm 2) = Ø nozzle 1.5 mm

Ejector, Series EBS

► push-in fitting ► pneumatic control, T-design ► with silencer ► vacuum switch: electronic, non-adjustable

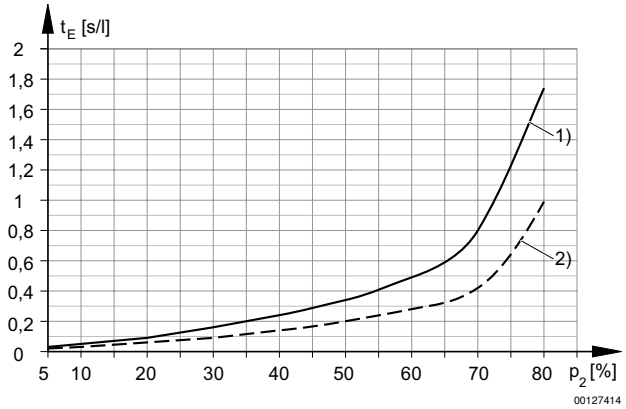

1) = Ø nozzle 2.0 mm 2) = Ø nozzle 2.5 mm

Air consumption qv depending on working pressure p1

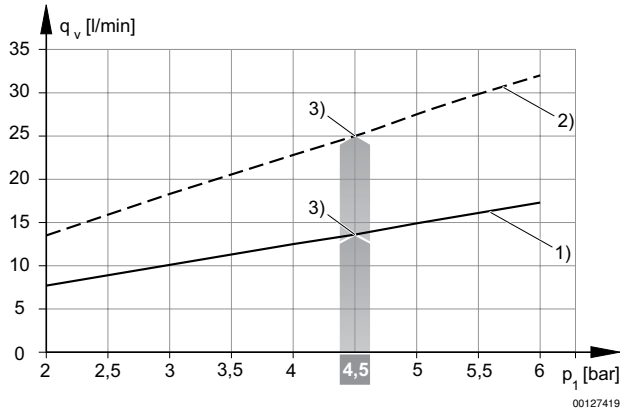

1) = Ø nozzle 0.5 mm 2) = Ø nozzle 0.7 mm
3) optimum working pressure

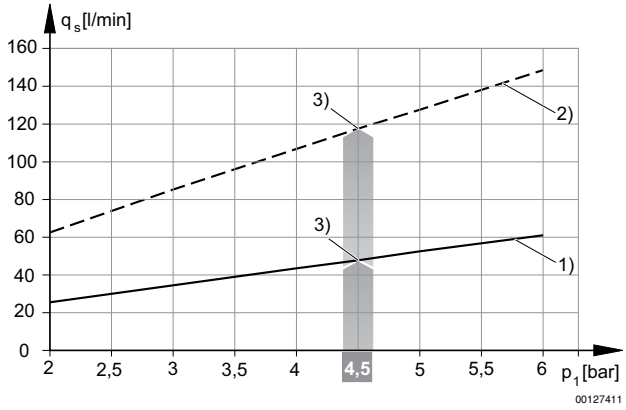

1) = Ø nozzle 1.0 mm 2) = Ø nozzle 1.5 mm
3) optimum working pressure

Ejector, Series EBS

► push-in fitting ► pneumatic control, T-design ► with silencer ► vacuum switch: electronic, non-adjustable

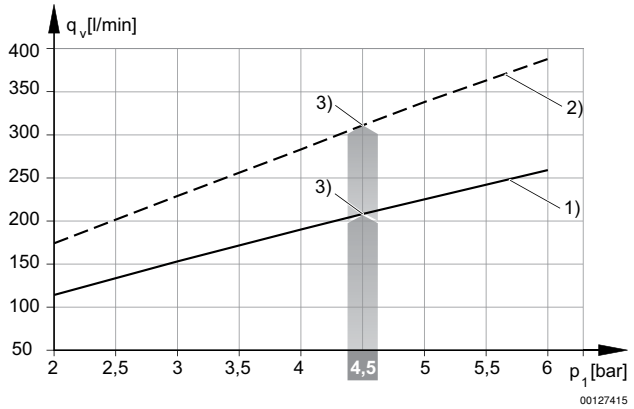

1) = Ø nozzle 2.0 mm 2) = Ø nozzle 2.5 mm
3) optimum working pressure

Fig. 1

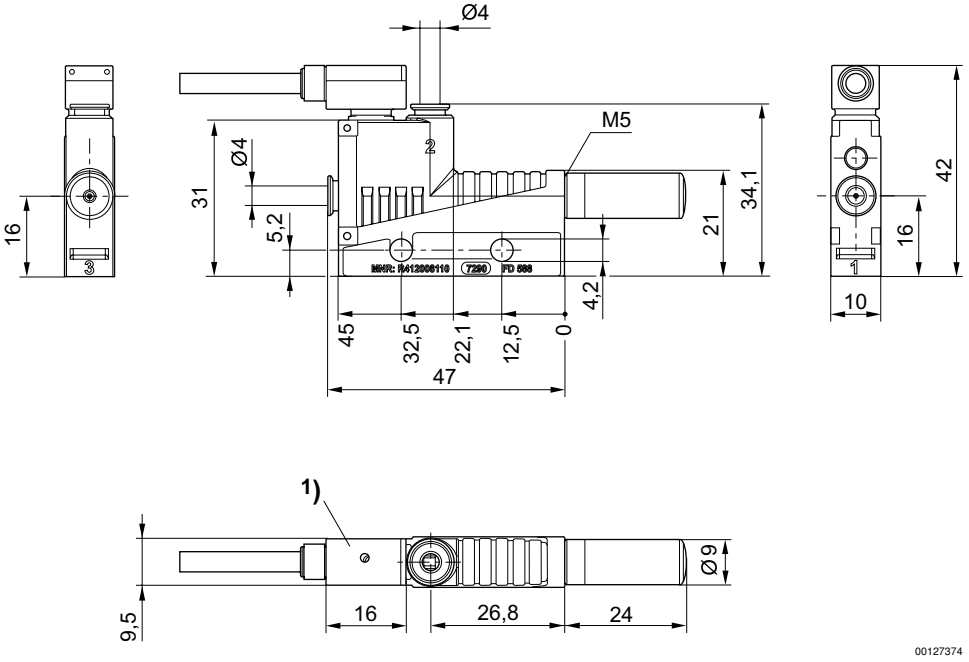

1) Vacuum switch is rotatable, not exchangeable
Cable length, 3 m, 3-wire, shielded

Ejector, Series EBS

► push-in fitting ► pneumatic control, T-design ► with silencer ► vacuum switch: electronic, non-adjustable

Fig. 2

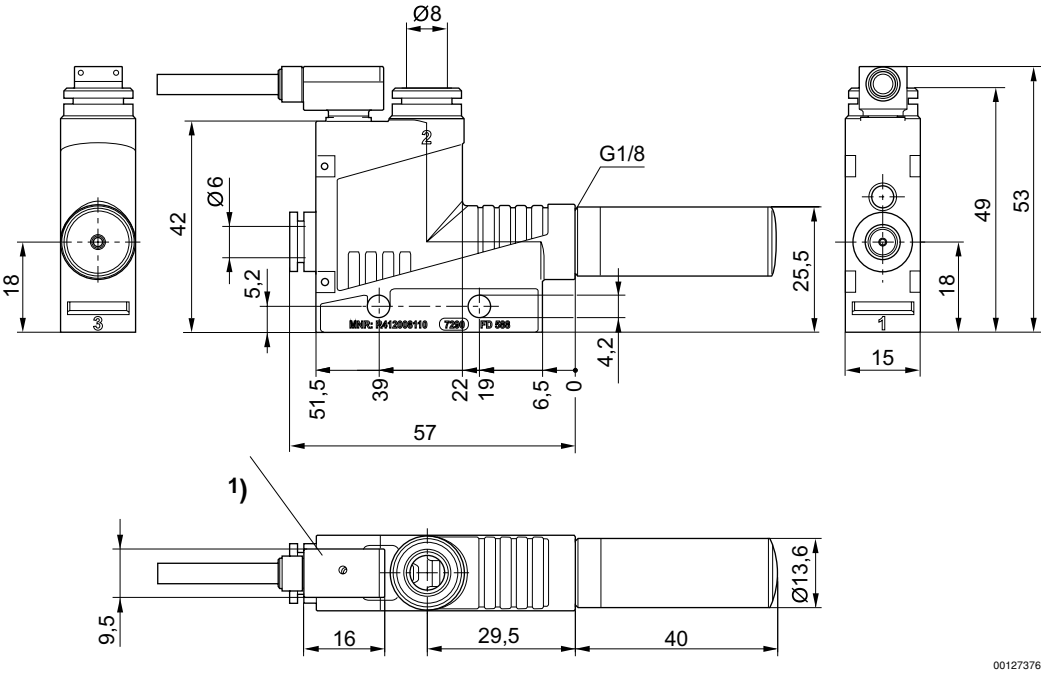

1) Vacuum switch is rotatable, not exchangeable
Cable length, 3 m, 3-wire, shielded

Fig. 3

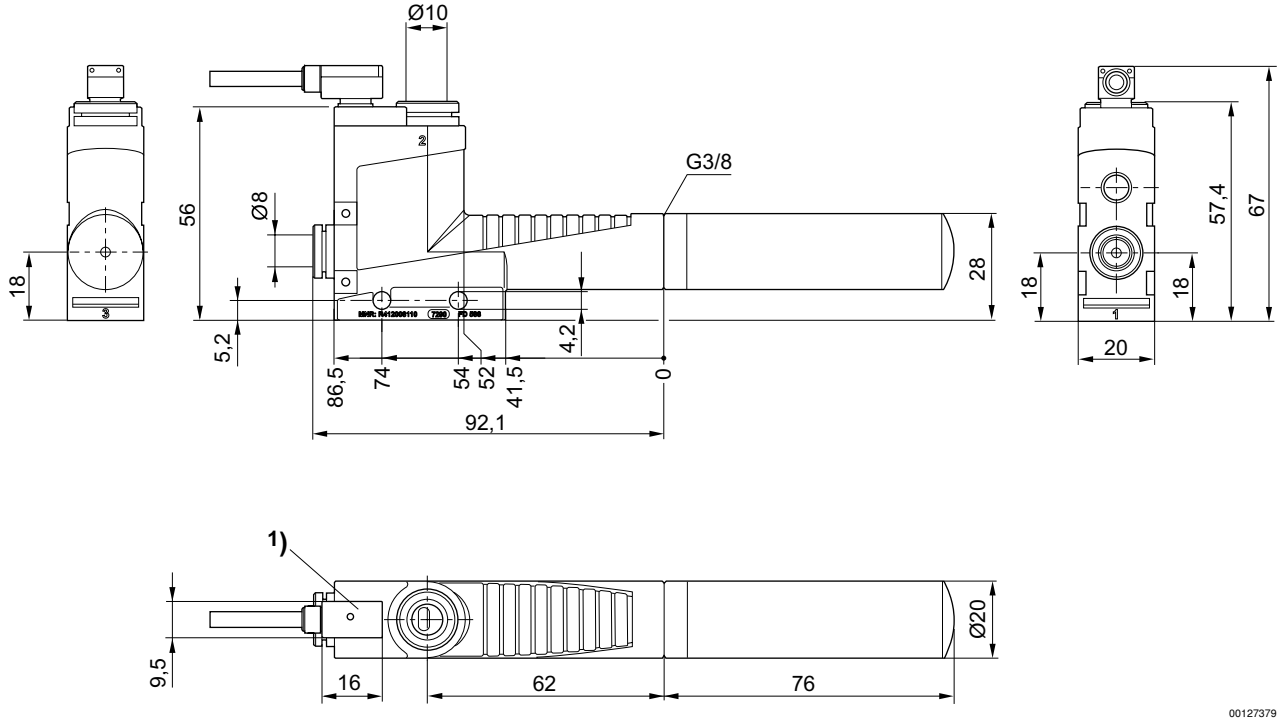

1) Vacuum switch is rotatable, not exchangeable
Cable length, 3 m, 3-wire, shielded