# 5/2-directional valve, Series CD07

**► Qn= 1200 l/min ► pipe connection ► compressed air connection output: G 1/4 ► cold-resistant ► suitable for ATEX**

00134153

| | |
|---|---|
| Version | Spool valve, zero overlap |
| Sealing principle | Soft sealing |
| Working pressure min./max. | -0.95 bar / 10 bar |
| Ambient temperature min./max. | -35°C / +70°C |
| Medium temperature min./max. | -35°C / +70°C |
| Medium | Compressed air |
| Max. particle size | 50 µm |
| Oil content of compressed air | 0 mg/m³ - 1 mg/m³ |
| Compressed air connection | according to ISO 228-1 |
| Materials: | |
| Housing | Die cast zinc; Polyamide, fiber-glass reinforced |
| Seals | Acrylonitrile Butadiene Rubber; Polyurethane |

| | Actuating element | Compressed air connection | | | Qn | Qn 1 → 2 | Qn 2 → 3 | Actuating force Min. | Part No. |
|---|---|---|---|---|---|---|---|---|---|
| | | Input | Output | Exhaust | | | | | |
| | | | | | [l/min] | [l/min] | [l/min] | [N] | |
| 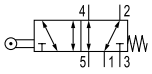 | Roller | G 1/4 | G 1/4 | G 1/4 | 1200 | 1200 | 1200 | 52 | 5634610190 |
| 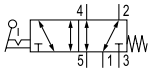 | Hand lever, with detent, without detent | G 1/4 | G 1/4 | G 1/4 | 1200 | 1200 | 1200 | 26 | 5634630190 |

| Part No. | Material: Actuating control | Weight | Fig. |
|---|---|---|---|
| | | | |
| | | [kg] | |
| 5634610190 | Polyoxymethylene | 0.59 | Fig. 1 |
| 5634630190 | Polyoxymethylene; Aluminum | 0.62 | Fig. 2 |
| Nominal flow Qn at 6 bar and Δp = 1 bar | | | |

## 5/2-directional valve, Series CD07

**► Qn= 1200 l/min ► pipe connection ► compressed air connection output: G 1/4 ► cold-resistant ► suitable for ATEX**

### Dimensions, Fig. 1

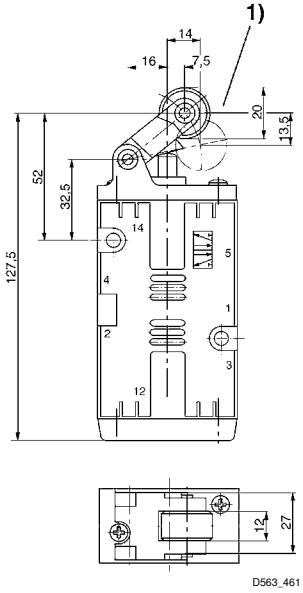


1) approach angle of rollers max. 30°

### Dimensions, Fig. 2

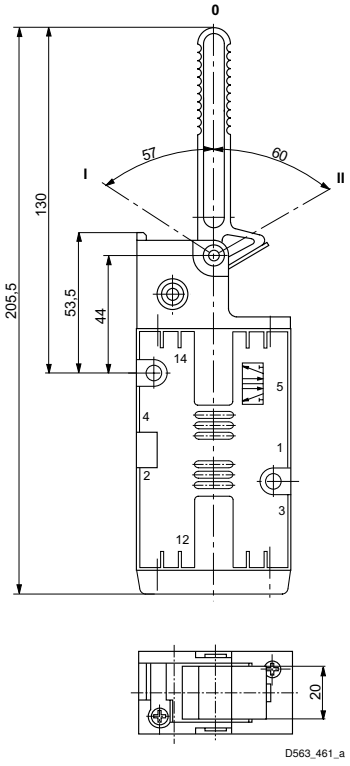


Position 0: initial position, position I: with detent; manual return, position II: automatic spring return.