Precision pressure regulator, Series AS3-RGP-...-E11

► G 1/2 ► Qn=5000 l/min ► Activation: mechanical ► lockable ► with E11 locking

00015815

Mounting orientation	Any
Working pressure min./max.	-- / 16 bar
Medium	Compressed air Neutral gases
Medium temperature min./max.	-10 °C / +50 °C
Ambient temperature min./max.	-10 °C / +50 °C
Regulator type	Diaphragm-type pressure regulator, Can be assembled into blocks
Regulator function	with relieving air exhaust
Pressure supply	single
Max. Internal air consumption	2.6 l/min
Materials:	
Housing	Polyamide
Front plate	Acrylonitrile butadiene styrene
Seals	Acrylonitrile Butadiene Rubber

Technical Remarks

- The pressure dew point must be at least 15 °C under ambient and medium temperature and may not exceed 3 °C.
- Recommended pre-filter: 5 µm
- The E11 locking is delivered without a key (see accessories for keys).

	Port	Qn	Adjustment range min. - max..	Weight	Part No.
		[l/min]	[bar]	[kg]	
	G 1/2	5000	0.2 - 4	0.528	R412007158
Nominal flow Qn at p1 = 6.3 bar and Δp = 1 bar Order pressure gauge separately					

Pressure characteristics curve

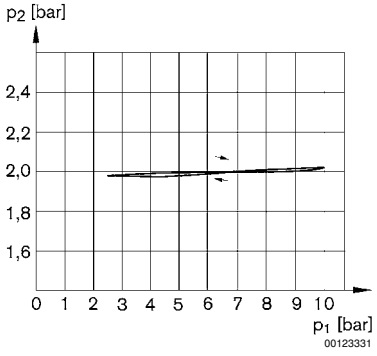

p1 = working pressure
p2 = secondary pressure

Precision pressure regulator, Series AS3-RGP-...-E11

► G 1/2 ► Qn=5000 l/min ► Activation: mechanical ► lockable ► with E11 locking

Flow rate characteristic (p2: 0,5 - 8 bar)

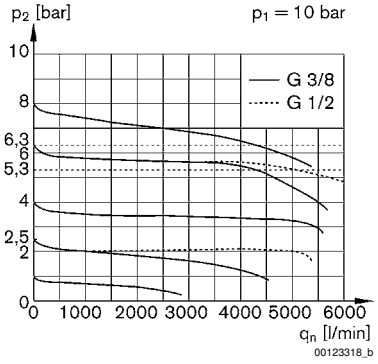

p1 = Working pressure
p2 = Secondary pressure
qn = Nominal flow

Dimensions

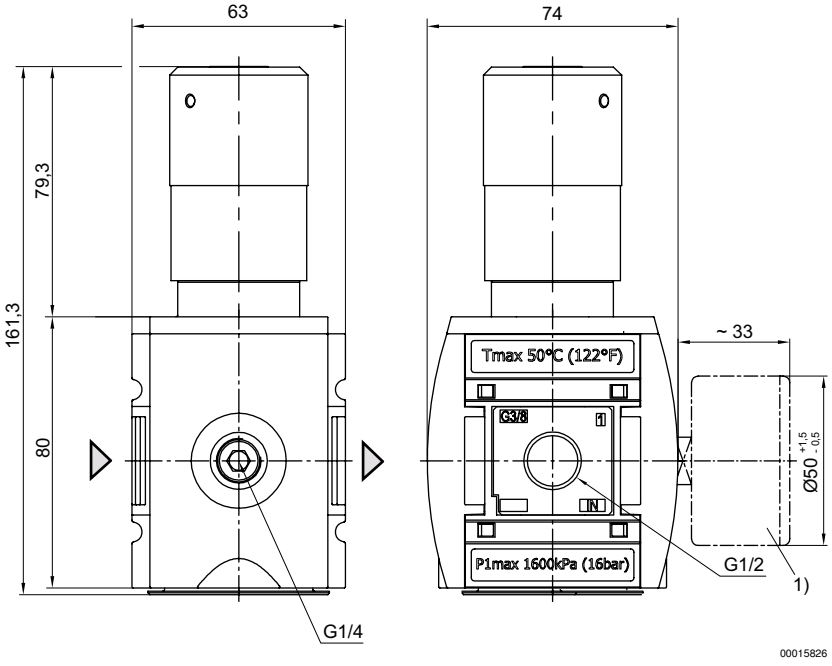

1) Order pressure gauge separately