AVENTICS

Cylinder accessories ► Locking Elements, series CL1

Holding unit HU1

Rexroth
Pneumatics

Brochure

Cylinder accessories ► Locking Elements, series CL1

Holding unit HU1

	Holding unit, HU1 ► Ø20 - 25 mm ► hold: spring force, release: compressed air	3
	Holding unit, HU1 ► Ø32 - 100 mm ► hold: spring force, release: compressed air	5

Part numbers marked in bold are available from the central warehouse in Germany, see the shopping basket for more detailed information
Pneumatics catalog, online PDF, as of 2014-08-20, ©AVENTICS S.a.r.l., subject to change

Holding unit, HU1

► Ø20 - 25 mm ► hold: spring force, release: compressed air

Function	Hold with clamping jaws
release pressure	4 bar / 8 bar
Ambient temperature min./max.	-10°C / +60°C
Medium temperature min./max.	-10°C / +60°C
Max. particle size	5 µm
Oil content of compressed air	0 mg/m³ - 5 mg/m³
Static holding force	See table below
Materials:	
Housing	Aluminum, black anodized

Technical Remarks

- The pressure dew point must be at least 15 °C under ambient and medium temperature and may not exceed 3 °C.
- The oil content of compressed air must remain constant during the life cycle.
- Use only the approved oils from AVENTICS, see chapter „Technical information“.
- Warning:The holding unit may not be used for the following applications:- for dynamic holding- in or as safety equipment
- Holding unit may only be unlocked when turned off.
- Make sure that the load direction does not change during a holding interval. A change in the direction of force, as well as external forces such as impacts, strong vibrations, or torsional forces, will briefly release the piston rod and may destroy the HU1 holding unit.
- NOTICE:The minimum control pressure is >= the working pressure of the cylinder!

	Piston Ø	suitable piston rod diameter	Piston rod extension	Compressed air connection	Static holding force	Weight	Part No.
	[mm]	[mm]	[mm]		[N]	[kg]	
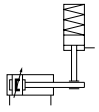	20	8	54	M5	300	0.11	0821401163
	25	10	51		400		0821401164
Holding force at 0 bar							

Holding unit, HU1

► Ø20 - 25 mm ► hold: spring force, release: compressed air

Dimensions

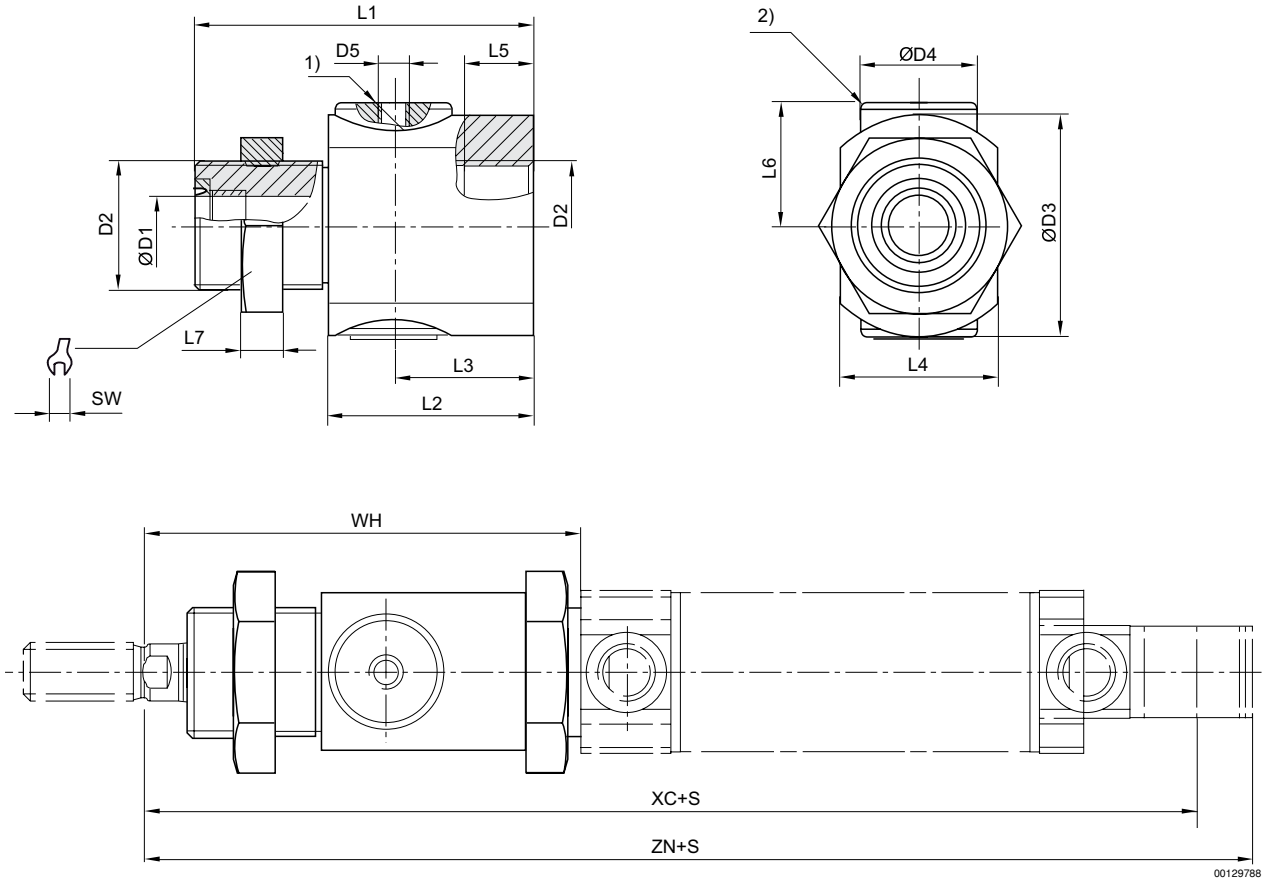

1) air connection
2) Holding cartridge
S = stroke

Piston Ø	ØD1	D2	ØD3	ØD4	D5	L1	L2	L3	L4	L5	L6	L7	SW
20	8	M22x1,5	38	20	M5	58	35	24	27	12	21	7	30
25	10	M22x1,5	38	20	M5	58	35	24	27	12	21	7	30

Piston Ø	WH	XC	ZN										
20	78	149	163.5										
25	79	155	170.5										

Holding unit, HU1

► Ø32 - 100 mm ► hold: spring force, release: compressed air

00104762

Function	Hold with clamping jaws
release pressure	4 bar / 8 bar
Ambient temperature min./max.	-10°C / +60°C
Medium temperature min./max.	-10°C / +60°C
Max. particle size	5 µm
Oil content of compressed air	0 mg/m³ - 5 mg/m³
Static holding force	See table below
Materials:	
Housing	Aluminum, black anodized

Technical Remarks

- The pressure dew point must be at least 15 °C under ambient and medium temperature and may not exceed 3 °C.
- The oil content of compressed air must remain constant during the life cycle.
- Use only the approved oils from AVENTICS, see chapter „Technical information“.
- Warning:The holding unit may not be used for the following applications:- for dynamic holding- in or as safety equipment
- Holding unit may only be unlocked when turned off.
- Make sure that the load direction does not change during a holding interval. A change in the direction of force, as well as external forces such as impacts, strong vibrations, or torsional forces, will briefly release the piston rod and may destroy the HU1 holding unit.
- NOTICE:The minimum control pressure is >= the working pressure of the cylinder!

	Piston Ø	suitable piston rod diameter	Piston rod extension	Compressed air connection	Static holding force	Weight	Part No.
	[mm]	[mm]	[mm]		[N]	[kg]	
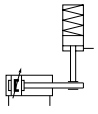	32	12	42	M5	650	0.2	0821401165
	40	16	45	G 1/8	1100	0.27	0821401166
	50	20	57	G 1/8	1600	0.57	0821401167
	63	20	57	G 1/8	2500	0.8	0821401168
	80	25	77	G 1/8	4000	1.85	0821401169
	100	25	77	G 1/8	6300	2.9	0821401170
Holding force at 0 bar							

Holding unit, HU1

► Ø32 - 100 mm ► hold: spring force, release: compressed air

Dimensions

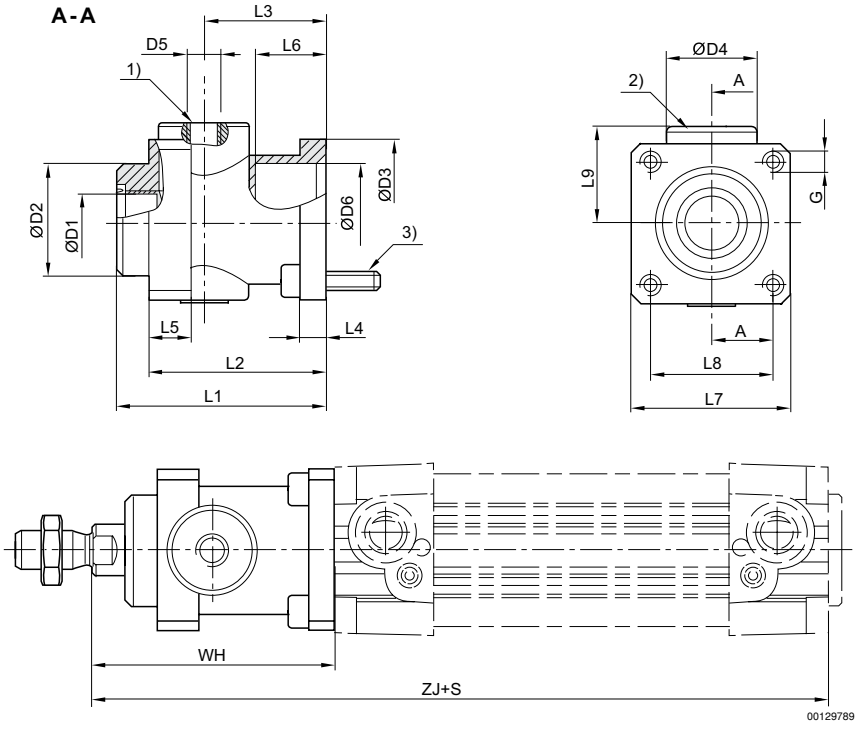

1) air connection
2) Holding cartridge
3) 4 mounting screws
S = stroke

Piston Ø	A	Ø D1	Ø D2	Ø D3	Ø D4	D5	L1	L2	L3	L4	L5	L6	L7
32	16,25	12	30	35	25	M5	58	48	34	8	13	20.5	45
40	19	16	35	40	28	G 1/8	65	55	38	8	13	22.5	50
50	23,25	20	40	50	35	G 1/8	82	70	48	15	16	29.5	60
63	28,25	20	45	60	38	G 1/8	82	70	49.5	15	16	29.5	70
80	36	25	45	80	48	G 1/8	110	90	61	18	20	35	90
100	44,5	25	55	100	58	G 1/8	115	100	69	18	20	–	105

Piston Ø	L8	L9	G	WH	ZJ								
32	32.5	25.5	M6	68	162								
40	38	30	M6	75	180								
50	46.5	36	M8	94	200								
63	56.5	40	M8	94	215								
80	72	50	M10	123	251								
100	89	58	M10	128	266								

Aventics GmbH
Ulmer Straße 4
30880 Laatzen
Phone +49 511 2136-0
Fax +49 511 2136-269
www.aventics.com
info@aventics.com

Find more contact information at
www.aventics.com/contact

The specified data serve only to describe the product. No statements concerning a certain condition or suitability for a certain application can be derived from our information. The information given does not release the user from the obligation of own judgment and verification. It must be remembered that our products are subject to a natural process of wear and aging.

20-08-2014

An example configuration is depicted on the title page. The delivered product may thus vary from that in the illustration. Subject to change. © AVENTICS S.à.r.l.. This document, as well as the data, specifications and other information set forth in it, are the exclusive property of AVENTICS S.a.r.l.. It may not be reproduced or given to third parties without its consent. PDF online