Valve system, Series HF02-LG

► Qn Max. = 1400 l/min ► Optional field bus connection with I/O function (CMS) ► B-design

00136916

Version	Field bus
Blocking principle	Single base plate principle
Working pressure min./max.	-0.9 bar / 10 bar
Control pressure min./max.	2.5 bar / 10 bar
Ambient temperature min./max.	+0°C / +50°C
Medium temperature min./max.	+0°C / +50°C
Medium	Compressed air
Max. particle size	5 µm
Oil content of compressed air	0 mg/m³ - 5 mg/m³
Protection class, with plug	IP65
Number of valve positions	16
Number of solenoid coils	32
Operational voltage electronics	24 V DC
Electronics voltage tolerance	-15% / +20%

Materials:	
End plate	Aluminum
Base plate	Polyamide

An example configuration is illustrated. The delivered product may thus deviate from the illustration.

Technical Remarks

- The min. control pressure must be adhered to, since otherwise faulty switching and valve failure may result!
- The pressure dew point must be at least 15 °C under ambient and medium temperature and may not exceed 3 °C.
- The oil content of compressed air must remain constant during the life cycle.
- Use only the approved oils from AVENTICS, see chapter „Technical information“.
- See the following pages on the series for technical data on individual components.
- For technical data for electronics (link structures), see the Chapter “Field bus connections”.
- For push-in fittings, only use plug accessories made of plastic (polyamide) from our catalog.
- It is necessary to maintain the electrical current in the coil of double solenoid valves to avoid unexpected auto-switching.

Configurable product

This product is configurable. Please use our Internet configurator at http://www.aventics.com or contact the nearest AVENTICS sales office.

Valve system, Series HF02-LG

► Qn Max. = 1400 l/min ► Optional field bus connection with I/O function (CMS) ► B-design

Dimensions

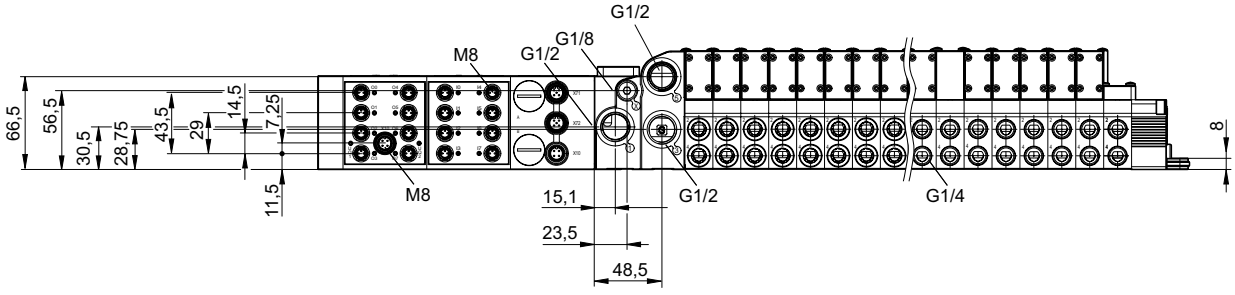

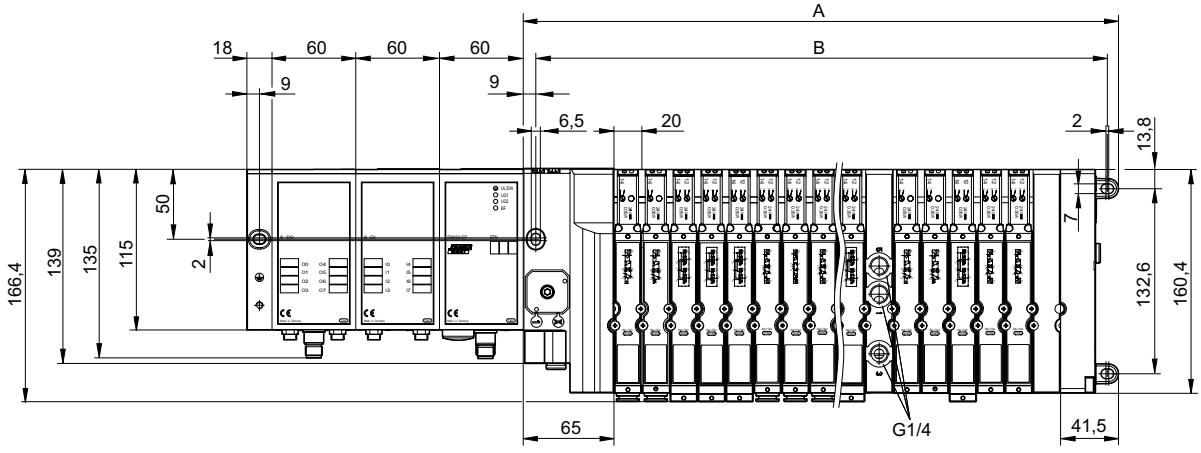

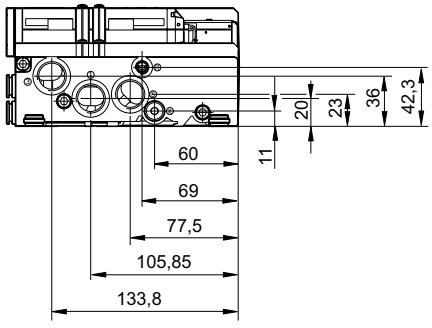

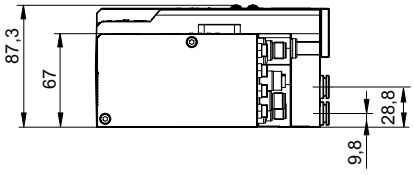

00136551

n	1	2	3	4	5	6	7	8	9	10	11	12	13	14
A	126.5	146.5	166.5	186.5	206.5	226.5	246.5	266.5	286.5	306.5	326.5	346.5	366.5	386.5
B	109.5	129.5	149.5	169.5	189.5	209.5	229.5	249.5	269.5	289.5	309.5	329.5	349.5	369.5

n	15	16												
A	406.5	426.5												
B	389.5	409.5												
n = number of base plates														