2/2-directional valve, Series AP

► Qn= 350 l/min ► pipe connection ► compressed air connection output: G 1/8

00108491

Version	Poppet valve
Working pressure min./max.	0 bar / 10 bar
Ambient temperature min./max.	-30°C / +80°C
Medium temperature min./max.	-30°C / +80°C
Medium	Compressed air
Max. particle size	5 µm
Oil content of compressed air	0 mg/m³ - 5 mg/m³
Materials:	
Housing	Aluminum
Seals	Acrylonitrile Butadiene Rubber

	Actuating element	Compressed air connection		Qn	Material: Actuating control	Weight	Fig.	Part No.
		Input	Output					
				[l/min]		[kg]		
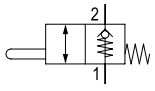	Plunger	G 1/8	G 1/8	350	Brass	0.065	Fig. 1	0820404020
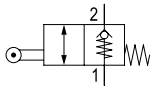	Roller	G 1/8	G 1/8	350	Polyoxymethylene	0.075	Fig. 2	**0820404021**
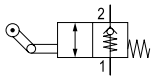	Roller lever, one-way trip	G 1/8	G 1/8	350	Polyoxymethylene; Polyamide	0.075	Fig. 3	0820404022
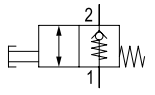	Push button	G 1/8	G 1/8	350	Polyamide	0.075	Fig. 4	**0820404023**
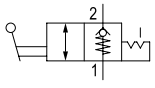	Lever	G 1/8	G 1/8	350	Polyamide	0.065	Fig. 5	**0820404024**
Nominal flow Qn at 6 bar and Δp = 1 bar								

Actuating force

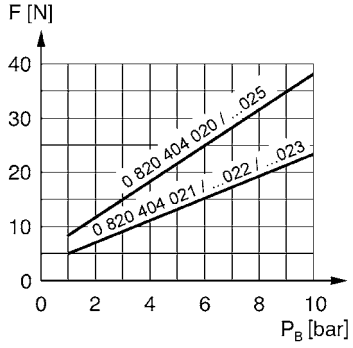

00108492

F = actuating force
P_B = Working pressure

Part numbers marked in bold are available from the central warehouse in Germany, see the shopping basket for more detailed information

2/2-directional valve, Series AP

► Qn= 350 l/min ► pipe connection ► compressed air connection output: G 1/8

Dimensions, Fig. 1

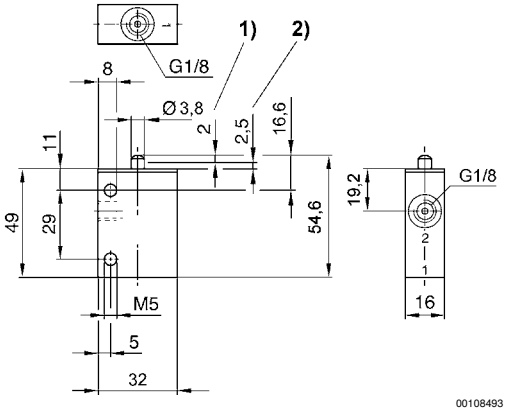

1) actuating stroke
2) overstroke
Dimensions of basic valve apply to all types of actuation.

Dimensions, Fig. 2

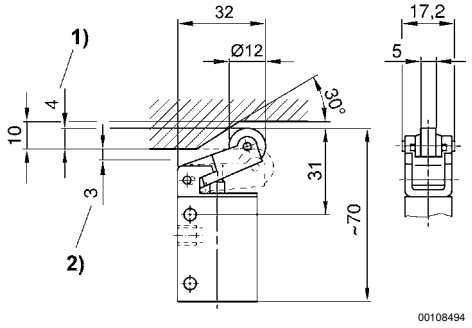

1) actuating stroke
2) overstroke

Dimensions, Fig. 3

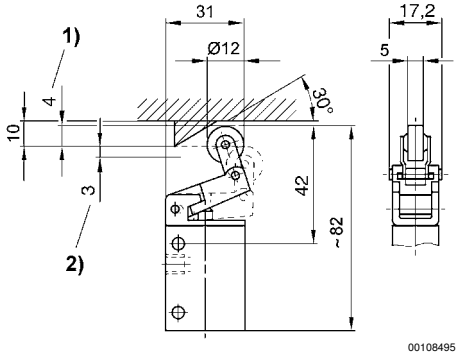

1) actuating stroke
2) overstroke

2/2-directional valve, Series AP

► Qn= 350 l/min ► pipe connection ► compressed air connection output: G 1/8

Dimensions, Fig. 4

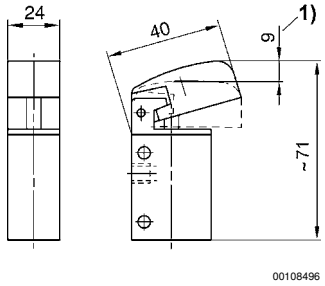

1) actuating stroke

Dimensions, Fig. 5

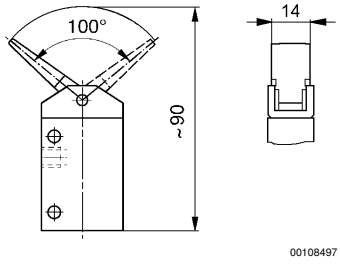

actuating torque: 6 Ncm