compact ejector, Series ECS

► with release valve ► with silencer ► with non-return valve, With filter ► vacuum switch: electronic ► 1x PNP and 1x analog

00103614

Ambient temperature min./max.	+0°C / +50°C
Medium temperature min./max.	+0°C / +60°C
Working pressure min./max.	2.5 bar / 6 bar
Medium	Compressed air
Max. particle size	5 µm
Oil content of compressed air	0 mg/m³ - 1 mg/m³
Protection class:, with electrical connector	See table below
Duty cycle according to DIN VDE 0580 standard	100 %
Hysteresis	adjustable
Repeatability (% of full scale value)	± 1 %
DC operating voltage	24 V
Voltage tolerance DC	- 5% / +10%
Switch output current Max.	125 mA
Materials:	
Housing	Aluminum, anodized
Seal	Acrylonitrile Butadiene Rubber
Silencers	Polyethylene

Technical Remarks

- Note: All data refers to an ambient pressure of 1013 mbar and an ambient temperature of 20°C.
- The pressure dew point must be at least 15 °C under ambient and medium temperature and may not exceed 3 °C.
- The oil content of compressed air must remain constant during the life cycle.

	Type	Nozzle Ø	Power consumption Solenoid valve	Max. vacuum level at p.opt	Max. suction capacity	Air consumption at p.opt.	Part No.
			DC				
		[mm]	[W]	[%]	[l/min]	[l/min]	
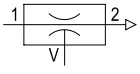	ECS-EC-10-NO	1	1.3	84	37	53	0821305134
	ECS-EC-15-NO	1.5	1.3	85	65	117	**0821305139**
	ECS-EC-20-NO	2	2.5	83	116	190	0821305144
	ECS-EC-30-NO	3	2.5	87	200	420	0821305149
	ECS-EC-10-NC	1	1.3	84	37	53	0821305135
	ECS-EC-15-NC	1.5	1.3	85	65	117	**0821305140**
	ECS-EC-20-NC	2	2.5	83	116	190	**0821305145**
	ECS-EC-30-NC	3	2.5	87	200	420	0821305150

compact ejector, Series ECS

► with release valve ► with silencer ► with non-return valve, With filter ► vacuum switch: electronic ► 1x PNP and 1x analog

Part No.	Sound pressure level intake effect	Sound pressure level intake effect	Protection against overpressure [max.]	Weight	Note
	[dBA]	[dBA]	[bar]	[kg]	
0821305134	66	68	5	0.275	1); 3); 5)
0821305139	68	68		0.275	1); 3); 5)
0821305144	76	78		0.465	2); 4); 6)
0821305149	82	82		0.485	2); 4); 6)
0821305135	66	68		0.275	1); 3); 5)
0821305140	68	68		0.275	1); 3); 5)
0821305145	76	78		0.465	2); 4); 6)
0821305150	82	82		0.485	2); 4); 6)

1) Nozzle material: Brass
2) Nozzle material: Aluminum
3) Protection class : , with electrical connector: IP40
4) Protection class : , with electrical connector: IP65
5) Electr. connection: Plug; Industrial plug connector; 2-pin
6) Electr. connection: Plug; EN 175301-803, form C

ECS-EC-...NO-C-S-VE

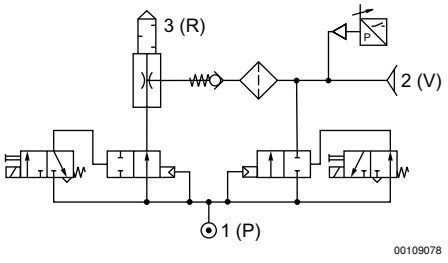

NO = ejector suction line open without current
C = Solenoid valve for release pulse
S = integrated non-return valve
VE = electronic vacuum switch

ECS-EC-...NC-C-S-VE

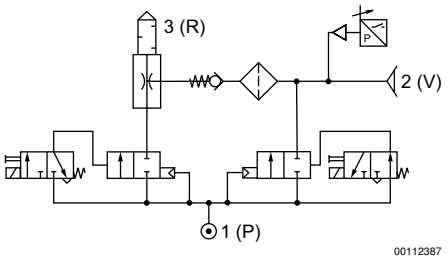

NC = ejector line closed without current
C = Solenoid valve for release pulse
S = integrated non-return valve
VE = electronic vacuum switch

compact ejector, Series ECS

► with release valve ► with silencer ► with non-return valve, With filter ► vacuum switch: electronic ► 1x PNP and 1x analog

Vacuum p2 depending on working pressure p1

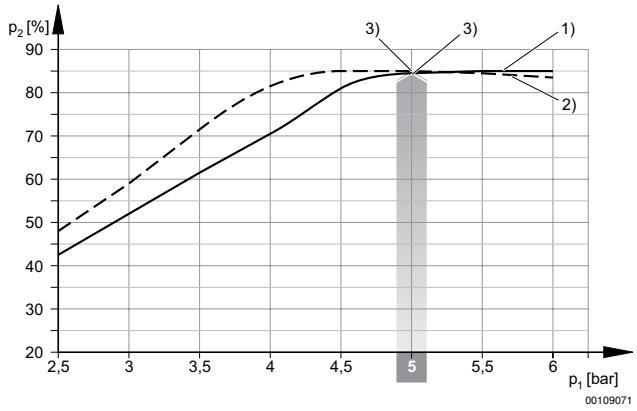

1) Ø nozzle 1.0 mm
2) Ø nozzle 1.5 mm
3) optimum working pressure

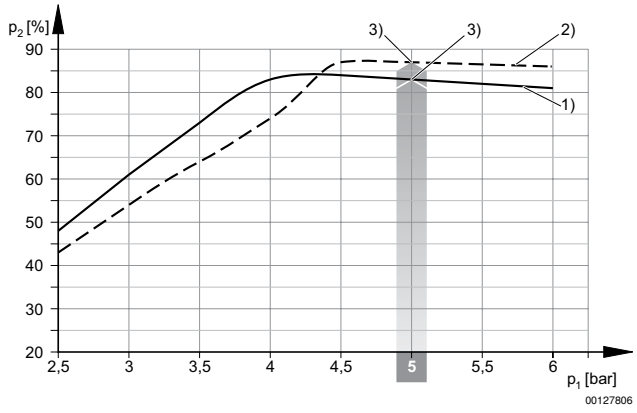

1) Ø nozzle 2.0 mm
2) Ø nozzle 3.0 mm
3) optimum working pressure

Suction capacity qs depending on working pressure p1

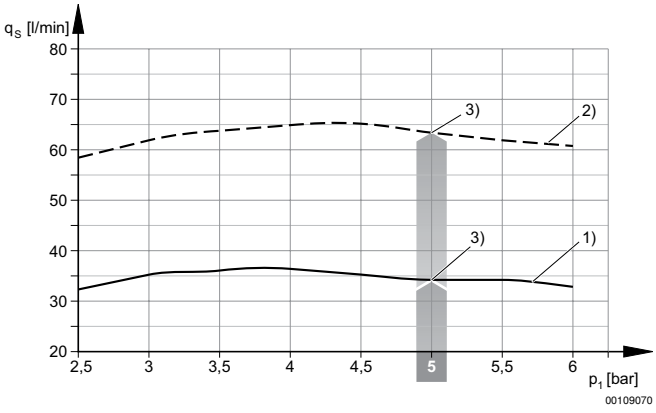

1) Ø nozzle 1.0 mm
2) Ø nozzle 1.5 mm
3) optimum working pressure

compact ejector, Series ECS

► with release valve ► with silencer ► with non-return valve, With filter ► vacuum switch: electronic ► 1x PNP and 1x analog

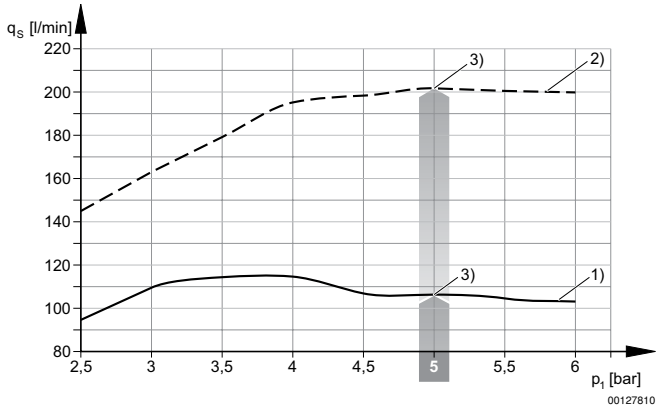

1) Ø nozzle 2.0 mm
2) Ø nozzle 3.0 mm
3) optimum working pressure

Evacuation time tE depending on vacuum p2 for 1 l volume (with optimal operating pressure p1opt)

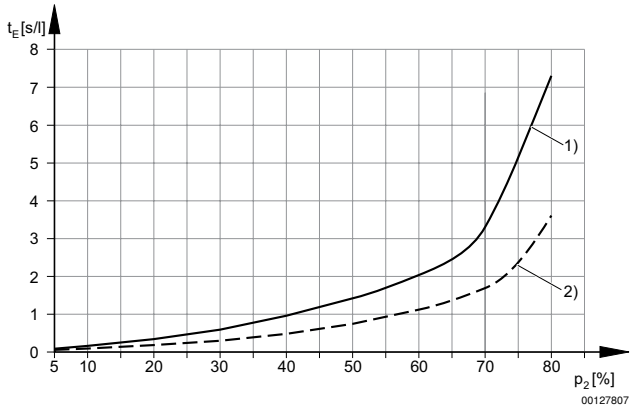

1) Ø nozzle 1.0 mm
2) Ø nozzle 1.5 mm

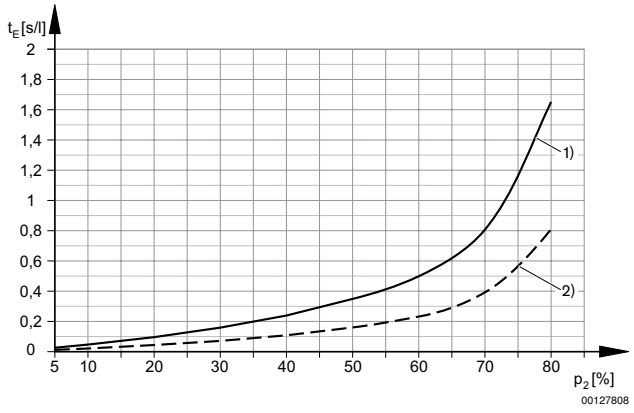

1) Ø nozzle 2.0 mm
2) Ø nozzle 3.0 mm

compact ejector, Series ECS

► with release valve ► with silencer ► with non-return valve, With filter ► vacuum switch: electronic ► 1x PNP and 1x analog

Air consumption qv depending on working pressure p1

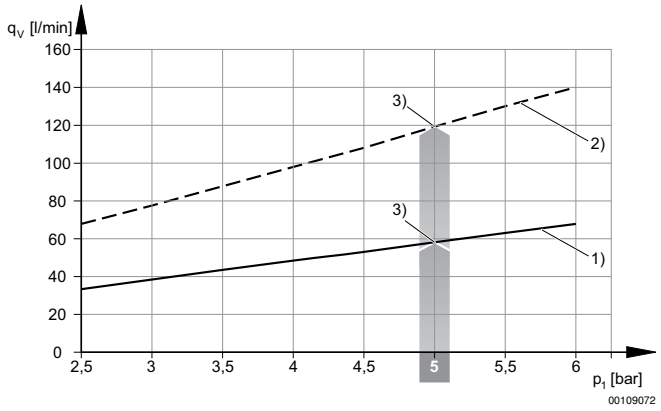

1) Ø nozzle 1.0 mm
2) Ø nozzle 1.5 mm
3) optimum working pressure

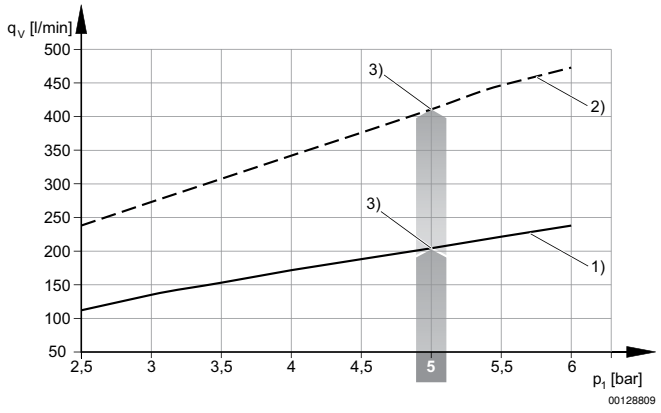

1) Ø nozzle 2.0 mm
2) Ø nozzle 3.0 mm
3) optimum working pressure

compact ejector, Series ECS

► with release valve ► with silencer ► with non-return valve, With filter ► vacuum switch: electronic ► 1x PNP and 1x analog

ECS-EC-10/-15

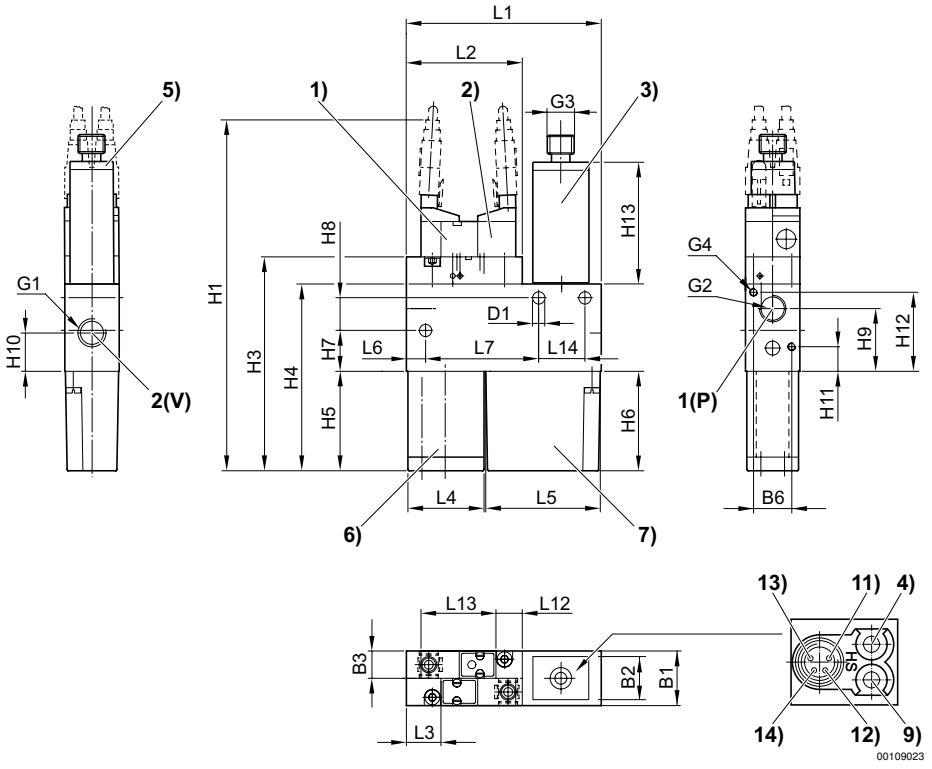

1) Vacuum ON/OFF solenoid valve; 2) Release pulse solenoid valve; 3) Vacuum switch; 4) Switching point setting for vacuum switch; 5) LED switching point indicator for vacuum switch; 6) Silencer; 7) Filter
9) Hysteresis setting; 11) + UB (pin 1); 12) Analog output (pin 2); 13) Switch output (pin 4); 14) 0 V (pin 3)

Part No.	B1	B2	B3	B6	D1	G1	G2	G3	G4	H1	H3	H4
0821305134	20	16	10	14	4.5	G 1/8	G 1/8	M8x1	M3	129	78.5	68.5
0821305139	20	16	10	14	4.5	G 1/8	G 1/8	M8x1	M3	129	78.5	68.5
0821305135	20	16	10	14	4.5	G 1/8	G 1/8	M8x1	M3	129	78.5	68.5
0821305140	20	16	10	14	4.5	G 1/8	G 1/8	M8x1	M3	129	78.5	68.5

Part No.	H5	H6	H7	H8	H9	H10	H11	H12	H13	L1	L2	L3
0821305134	36.5	36.5	15	12	23	14	9	29	45	71.5	42.5	12.6
0821305139	36.5	36.5	15	12	23	14	9	29	45	71.5	42.5	12.6
0821305135	36.5	36.5	15	12	23	14	9	29	45	71.5	42.5	12.6
0821305140	36.5	36.5	15	12	23	14	9	29	45	71.5	42.5	12.6

Part No.	L4	L5	L6	L7	L12	L13	L14					
0821305134	28	42	7	41.5	9,6	27,5	17					
0821305139	28	42	7	41.5	9,6	27,5	17					
0821305135	28	42	7	41.5	9,6	27,5	17					
0821305140	28	42	7	41.5	9,6	27,5	17					

compact ejector, Series ECS

► with release valve ► with silencer ► with non-return valve, With filter ► vacuum switch: electronic ► 1x PNP and 1x analog

ECS-EC-20/-30

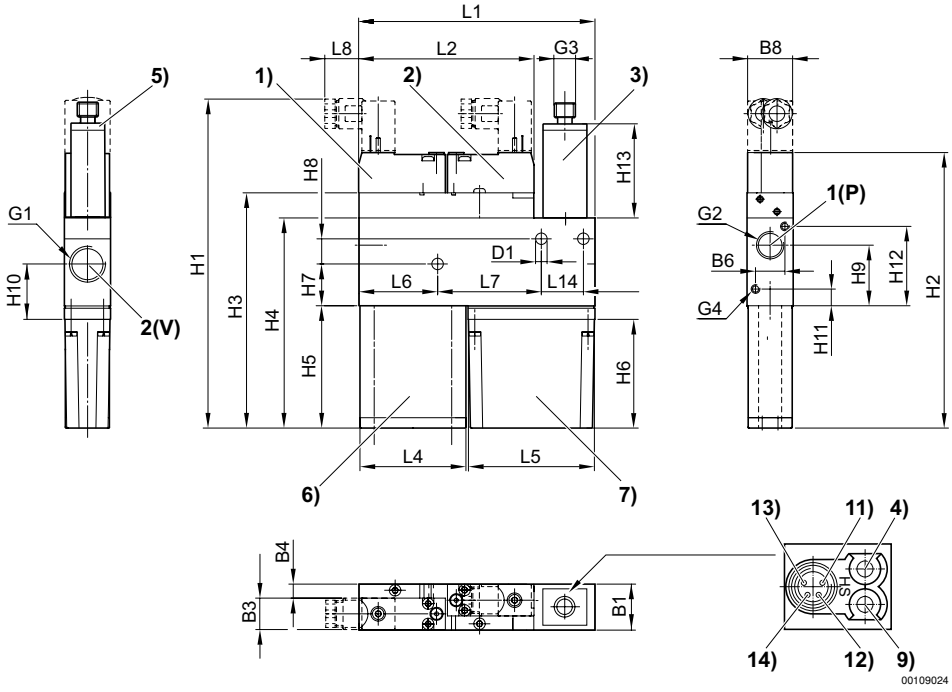

1) Vacuum ON/OFF solenoid valve; 2) Release pulse solenoid valve; 3) Vacuum switch; 4) Switching point setting for vacuum switch; 5) LED switching point indicator for vacuum switch; 6) Silencer; 7) Filter
9) Hysteresis setting; 11) + UB (pin 1); 12) Analog output (pin 2); 13) Switch output (pin 4); 14) 0 V (pin 3)

Part No.	B1	B3	B4	B6	B8	D1	G1	G2	G3	G4	H1	H2
0821305144	22	M8x1	6.8	18	22	5.5	G 3/8	G 1/4	M8x1	M4	157.5	132.5
0821305149	22	M8x1	6.8	18	22	5.5	G 3/8	G 1/4	M8x1	M4	157.5	147.5
0821305145	22	M8x1	6.8	18	22	5.5	G 3/8	G 1/4	M8x1	M4	157.5	132.5
0821305150	22	M8x1	6.8	18	22	5.5	G 3/8	G 1/4	M8x1	M4	157.5	147.5

Part No.	H3	H4	H5	H6	H7	H8	H9	H10	H11	H12	H13	L1
0821305144	112.5	100.5	58.5	52	20	12	29	26.5	8	38	45	112.5
0821305149	112.5	100.5	73.5	52	20	12	29	26.5	8	38	45	112.5
0821305145	112.5	100.5	58.5	52	20	12	29	26.5	8	38	45	112.5
0821305150	112.5	100.5	73.5	52	20	12	29	26.5	8	38	45	112.5

Part No.	L2	L4	L5	L6	L7	L8	L14
0821305144	83.5	50.5	60	37.5	49.5	16.5	20
0821305149	83.5	50.5	60	37.5	49.5	16.5	20
0821305145	83.5	50.5	60	37.5	49.5	16.5	20
0821305150	83.5	50.5	60	37.5	49.5	16.5	20