Valve system, Series CD01-PA

► Qn Max. = 1010 l/min ► Single plug-in wiring ► Electr. connection: plug, form C / plug, M12 ► ATEX optional

P576_500

Standards	ISO 15407-1, 26 mm
ATEX	II 3G Ex nA IIB T4 Gc X-15 °C ≤ Ta ≤ 50 °C
Working pressure min./max.	-0.95 bar / 16 bar
Control pressure min./max.	2 bar / 16 bar
Ambient temperature min./max.	-15°C / +50°C
Medium temperature min./max.	-15°C / +50°C
Medium	Compressed air
Max. particle size	50 µm
Oil content of compressed air	0 mg/m³ - 5 mg/m³
Connector standard	EN 175301-803, form C
DC operating voltage	24 V
Voltage tolerance DC	-10% / +10%
Operational voltage AC at 50 Hz	230 V, 110 V

An example configuration is illustrated. The delivered product may thus deviate from the illustration.

Technical Remarks

- The min. control pressure must be adhered to, since otherwise faulty switching and valve failure may result!
- The pressure dew point must be at least 15 °C under ambient and medium temperature and may not exceed 3 °C.
- The oil content of compressed air must remain constant during the life cycle.
- Use only the approved oils from AVENTICS, see chapter „Technical information“.
- See the following pages on the series for technical data on individual components.
- Note: “ATEX” option can be selected in the configurator or contact your nearest AVENTICS sales center.
- Supply plate optionally available with side ports.
- Working pressure and control pressure depend on the valve configuration.

Configurable product

This product is configurable. Please use our Internet configurator at http://www.aventics.com or contact the nearest AVENTICS sales office.

Valve system, Series CD01-PA

► Qn Max. = 1010 l/min ► Single plug-in wiring ► Electr. connection: plug, form C / plug, M12 ► ATEX optional

Dimensions, Flat pins

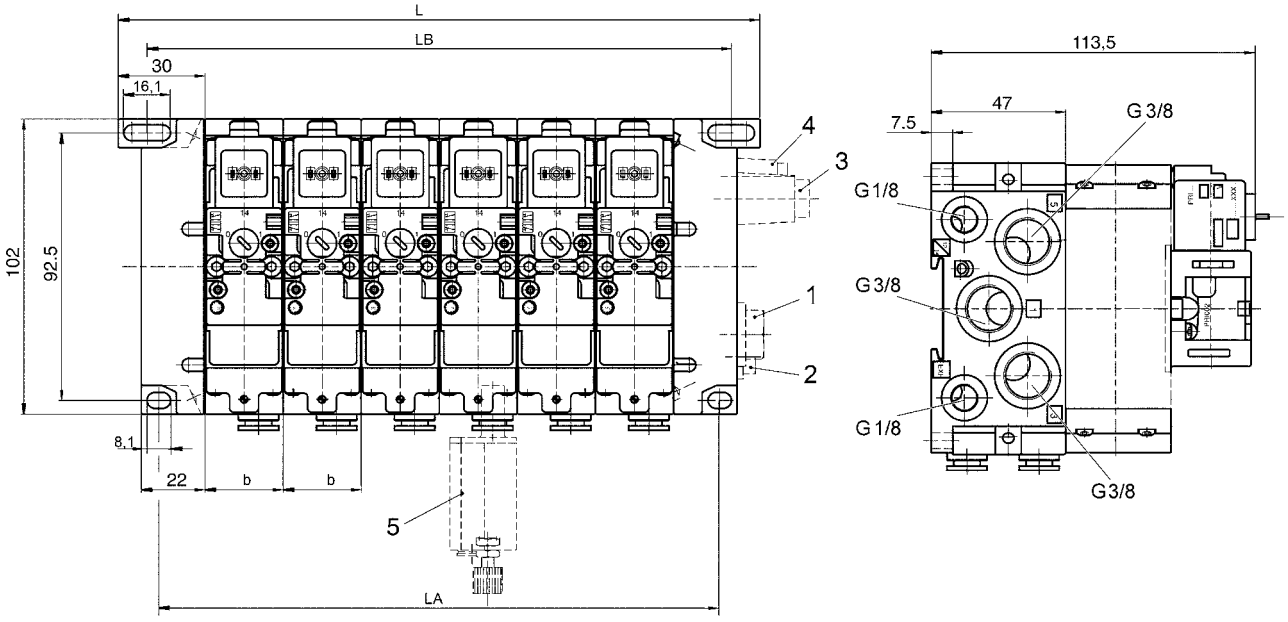

1) blanking screw G 3/8 2) blanking screw G 1/8 3) silencer G 3/8 4) silencer G 1/8 5) check-choke valve
L = n * b + 94
LB = n * b + 40
LA = n * b + 32
n = number of valve positions
b = width of valve positions (27.0 - 27.25 mm)
An example configuration is illustrated. The delivered product may thus deviate from the illustration.

Valve system, Series CD01-PA

► Qn Max. = 1010 l/min ► Single plug-in wiring ► Electr. connection: plug, form C / plug, M12 ► ATEX optional

Dimensions, M12 plug

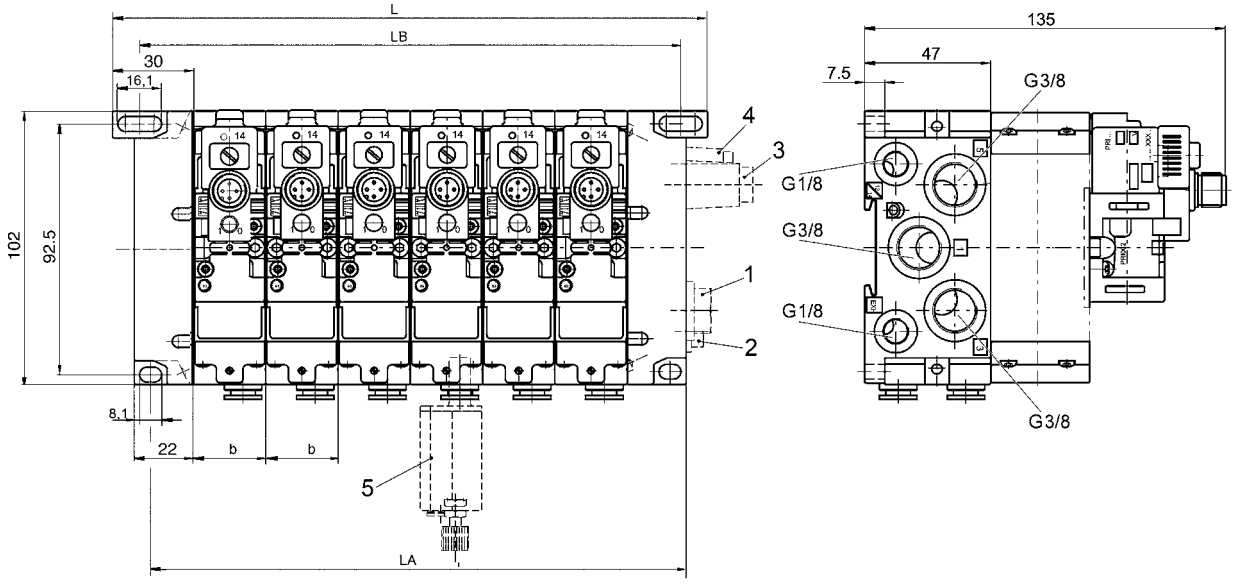

1) blanking screw G 3/8 2) blanking screw G 1/8 3) silencer G 3/8 4) silencer G 1/8 5) check-choke valve
L = n * b + 94
LB = n * b + 40
LA = n * b + 32
n = number of valve positions
b = width of valve positions (27.0 - 27.25 mm)
An example configuration is illustrated. The delivered product may thus deviate from the illustration.